Department of Civil and Environmental Engineering
The Hong Kong University of Science and Technology

CIVL 1100 Discovering Civil and Environmental Engineering

Laboratory Manual for
Structural Engineering Experiments

Submission of laboratory reports:

- Students in a group should discuss among themselves and work together to provide a **group** laboratory report. The report should be prepared in a **single** PDF file (combining all texts, graphs and figures). Also attach the data record sheets at the end of the report.
- Each student in the group needs to submit the **same** group report online to Canvas. The group report should be a group effort and all students in a group will get the same mark.
- Late submission will **NOT** be accepted.

1. Introduction

The major disciplines of structural engineers include the analysis and design of structural components and structural systems subjected to different types of loading. Engineers should ensure that the designs satisfy design criteria stated in codes of practice and client requirements. Furthermore, structural engineers should have a deep understanding of structural performance in order to optimise the structures and to figure out all possible failure mechanisms of structures within their service life.

The structural engineering lab session composes of two tests, (1) the *Three Pinned Arch Experiment* (Test 1) and (2) *Redundant Truss Experiment* (Test 2). Each test is conducted using both *experimental hardware* and *computer software*. The values provided by the software using the theoretical equations are then used to check the experimental results.

After the lab session, students will gain some basic concepts of how these structures perform under vertical loads. In addition, students will gain experience in analysing structures through hand-on practice during the lab sessions.

2. Hardware Experiment and Virtual Experiment

In the lab session, both tests are performed using the structures hardware and computer software. The structures hardware has been set up in the laboratory. One PC, in which the software has been installed, will be provided during the lab session.

To start the structures software:

1. On the PC, select **Start** > **Programs** > **TecQuipment Structures** > **TecQuipment Structures**. The 'Welcome Window' will appear.
2. Click on the experiment that matches the hardware you have set up.
3. Click on the **Virtual Experiment Wizard** button in the tool bar.
4. Start the virtual experiment.

3 Test 1 – Three Pinned Arch Experiment (STR9)

The test consists of two supports and two symmetrical bridge halves joined by a pin at the crown, as shown in Fig. 1. The left-hand half is permanently pinned to its support which only allows rotational movement (*Support A*). The right-hand side can rotate and slide up to an electronic load cell (*Support B*). The horizontal span length of the arch is 500 mm. In this test, a fixed load is applied at positions across the arch and the resulting horizontal reaction is measured. Note that the test is carried out using both experiment hardware and software in PC (*Virtual experiment*).

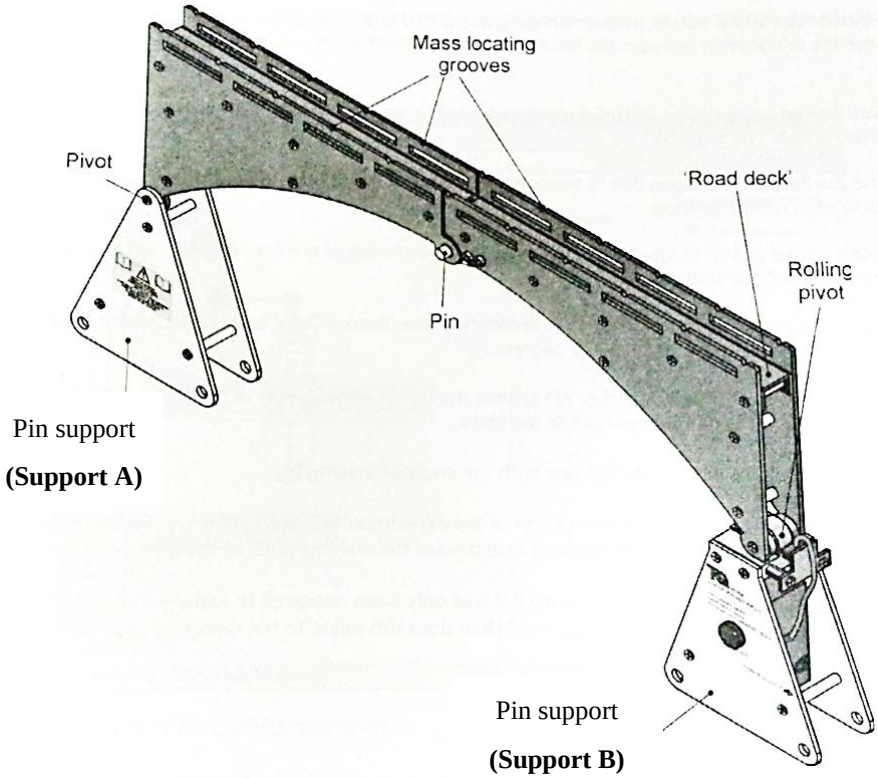

Fig. 1. Three-pinned arch hardware

3.1 Objectives

- To understand the structural behaviour of three-pinned arch via experimental study and computer simulation;
- To investigate the relationship between the horizontal reaction and the external load;
- To verify the accuracy of the theoretical formula, based on statics

3.2 Theoretical Background

From Fig. 2, for $0 \le x \le L/2$, the horizontal reaction at support A is

$$H_A = \frac{Wx}{2r} \qquad \text{(valid for } 0 \le x \le L/2\text{)}$$

For $L/2 < x \le L$, the horizontal reaction at support A is

$$H_A = \frac{W(L-x)}{2r} \qquad \text{(valid for } L/2 < x \le L\text{)}$$

where

W	=	external load (N)
L	=	span of the arch (m)
x	=	distance from the left pivot to the mass (m)
r	=	rise of the arch (m)

According to horizontal force equilibrium condition, the magnitude of horizontal reaction at support B should be identical to that of support A, i.e. $H_B = H_A$.

In addition, the Influence Value and Span Fraction are defined by

$$\text{Influence Value} = \frac{\text{Reaction}}{\text{Load}}$$

$$\text{Span Fraction} = \frac{\text{Distance from left pivot}}{\text{Span of the arch}}$$

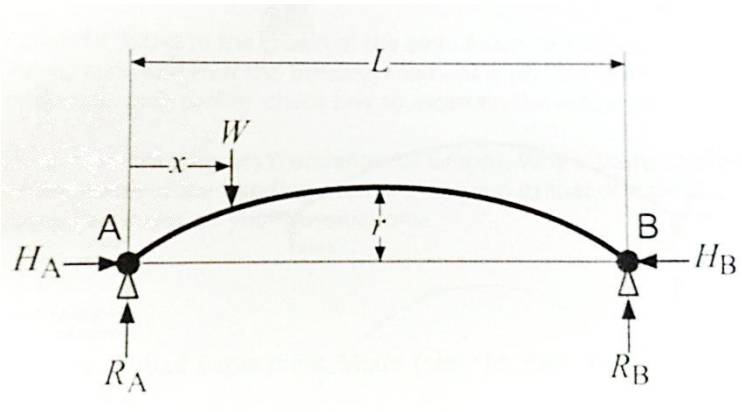

Fig. 2. Force diagram under a point load *W* at distance *x*

3.3 Test Procedures for Three-Pinned Arch Experiment*

CAUTION

- **Do NOT overload the structures.**
- **Avoid any direct contacts with the force sensor unless you are asked to do so.**

3.3.1 Test procedures for Hardware Test

1. Check the two symmetrical bridge halves so that the top of the bridges remains horizontal. Measure the dimensions of the hardware if necessary.
2. Put a 300-g mass at the 0 mm position of the arch (measured from Support A) and record the horizontal reaction in the column '*Experimental horizontal reaction*' in Table 1.
3. Move the mass to the 50-mm position of the arch and record the horizontal reaction.
4. Repeat step 2, until the last distance of 500 mm is reached (i.e. at 100 mm, 150 mm, …, 450 mm, 500 mm).

3.3.2 Test procedures for Virtual Experiment

1. Turn on the software in Virtual Experiment Mode following the instructions in page 2 of the lab menu.
2. Click and drag a 300-g mass from the Tool Box to the 0 mm position of the arch. Record the data in the column '*Theoretical horizontal reaction*' in Table 1.
3. Repeat steps 3 and 4 in the previous hardware test and record the theoretical horizontal reaction.

3.4 Questions and Discussions

1. Plot a graph of '*Experimental horizontal reaction*' (in N) as the vertical axis versus '*Distance from left*' as the horizontal axis (in mm). Label the axes clearly, with an appropriate title. What is the relationship between the applied load and the corresponding horizontal reaction? In what position would you place a point load to cause the maximum horizontal reaction? Comment on the results.
2. Discuss the support conditions of the three-pinned arch and develop a structural model for analysis.
3. (a) Separate the three-pinned arch structure from supports *A* and *B*, and then draw the free-body diagram. (b) The structure is further separated at pinned connection *C*. Draw the free-body diagrams.
4. (a) Write the moment equilibrium equation of the entire structure at support *B*; (b) Consider the left-hand half of the arch bridge *AC*, and write the moment equilibrium equation at pinned connection *C*; and (c) Solve for H_A.
5. Compare the experimental results with the theoretical values obtained in the virtual experiment. Comment on the two sets of result and the experimental errors.

4 Test 2 – Redundant Truss Experiment (STR17)

This experiment consists of a fixed framework made from steel rods bonded into joint pieces, as shown in Fig. 3. There are two special members built into the framework. One member can be disconnected from the framework by undoing a special nut and it is called redundant member. The other special member has a central ring to allow the redundant member to pass through in order to ensure all the members are in the same plane. The framework is mounted into two supports, one is a pinned support and the other is a roller support. A strain gauge is attached to each of the members to measure the strain of each member.

In this experiment, a concentrated load is applied at the tip of the '*statically determinate*' cantilever truss (Fig. 4a) and the resulting strains and axial forces of all the members are recorded. Next, the redundant member is attached into the cantilever truss and thus the whole truss becomes a '*statically indeterminate*' structure (Fig. 4b). Comparison of member force distribution between this case and the previous one will be carried out.

4.1 Objectives

- To study the relationship between deformation and external loading in cantilever truss structure;
- To investigate the member force distribution in statically determinate and indeterminate structures under a point load.
- To justify the accuracy of the theoretical equations.

4.2 Theoretical Background

According to Hooke's law, the stress is linear proportional to the strain, i.e.

$$E = \frac{\sigma}{\varepsilon}$$

where

E = Young's Modulus = 210 GPa for stainless steel

σ = stress in member

ε = strain

Stress in member is defined as

$$\sigma = \frac{F}{A}$$

where

F = force in member

A = cross-sectional area of member

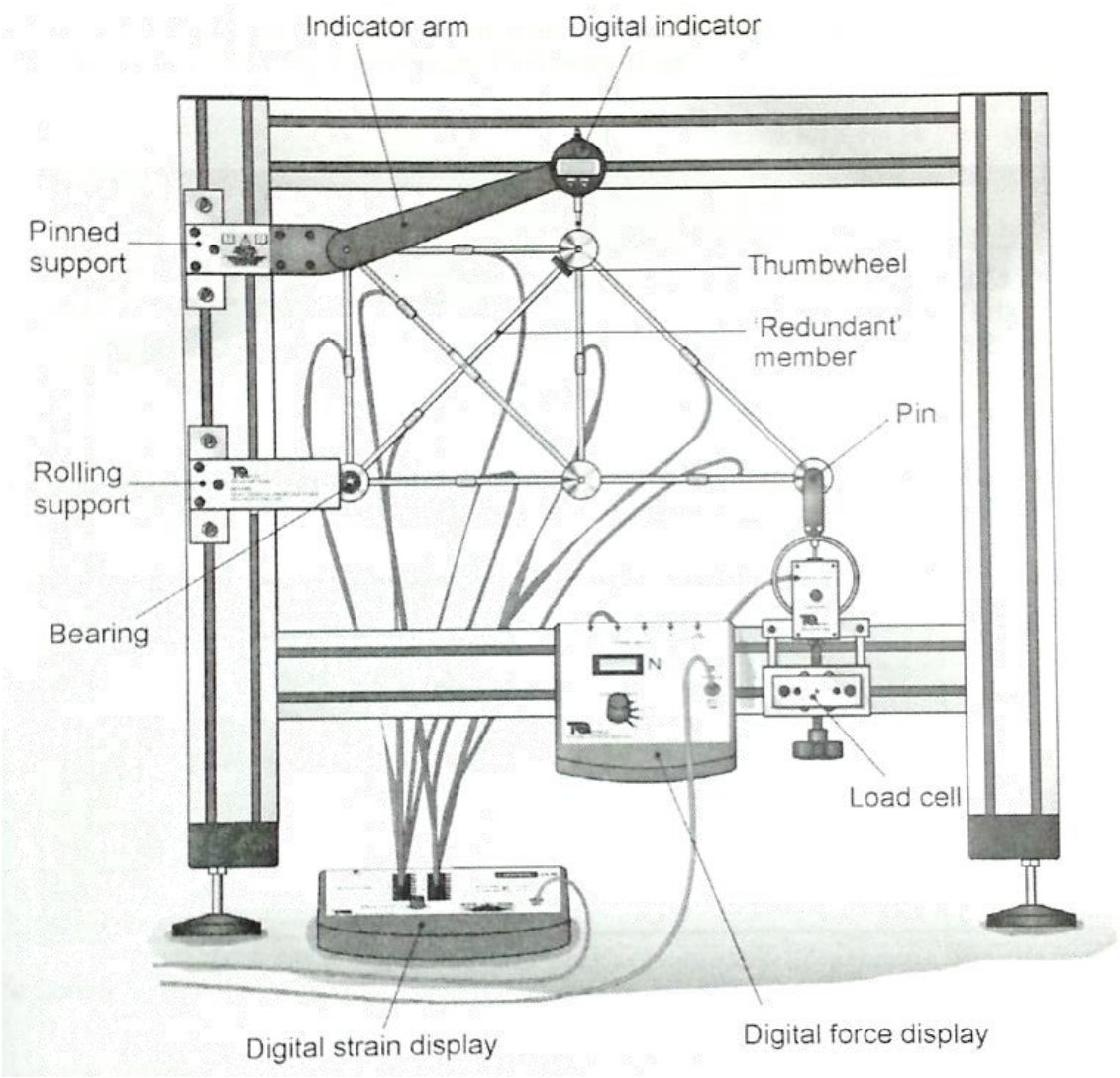

Fig. 3. Redundant truss hardware

4.3 Statically Determinate Structure Experiment*

CAUTION

- **Do NOT apply negative (upward) forces and overload the structure (greater than 280 N).**
- **Do not remove any cables and strain gauges from the structures hardware**

4.3.1 Test procedures for Hardware Test

1. Measure the dimension if necessary. Record the initial reading in strain gauges at zero force level.
2. Apply a loading of 50 N through the load cell (Fig. 3) and record the overall displacement of the truss and strains of the members in the row '*Measured strain*' in Table 2. Calculate the forces in all members from the strains.
3. Repeat step 2 in 50 N-steps for loads of 100 N, 150 N, 200 N and 250 N and record the corresponding results.

4.3.2 Test procedures for Virtual Experiment

1. Turn on the software in Virtual Experiment Mode.
2. Click on '*Section Properties*' option button in the Tool Box. Adjust the diameter of the simulated member to 6 mm. Click on the '*Tools*' option button to return to the normal mode.
3. Use the spin box next to the hardware mimic to apply zero load the structure and record the results.
4. Increase the load to 50 N at the end of the statically determinate cantilever structure and record the displacement and theoretical strain.
5. Repeat the previous step in 50 N-steps for loads of 100 N, 150 N, 200 N and 250 N and record the corresponding theoretical responses.

4.3.3 Questions and Discussions

1. Indicate the purpose of measuring the initial reading in strain gauges before applying loading.
2. Identify which members are in compression and which are in tension using the measured data.
3. Create a chart of '*Measured Strain*' as the vertical axis versus '*Load'* as the horizontal axis **for members 3 and 7** (refer to Fig. 4 in the Lab Manual). What is the relationship between member strain and external load? Explain the difference between the readings in members 3 and 7.
4. Create a chart of '*Measured Displacement*' as the vertical axis versus '*Load'* as the horizontal axis. What is the relationship between displacement and external load? What is the physical meaning of this graph?
5. Compare the experimental results with the theoretical results obtained in virtual experiment. Comment on the two sets of result.
6. Explain the reading of member 5.
7. Draw the free body diagram for the statically determinate cantilever truss and calculate the reactions if the external force F = 50 N. Provide your step-by-step calculations.
8. Complete the following force diagrams and determine the internal forces for members 1, 2, 3, 4 and 7 when F = 50 N. Please show your calculation steps.

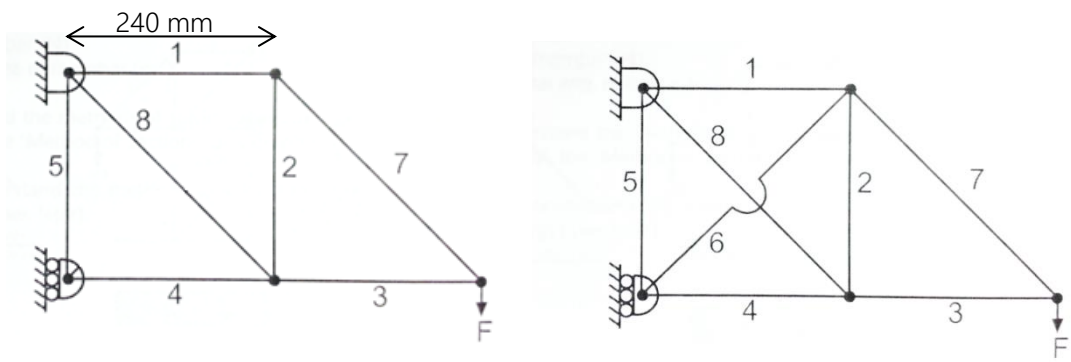

(a) (b)

Fig. 4. (a) Idealised statically determinate cantilever truss; (b) statically indeterminate cantilever truss

4.4 Statically Indeterminate Structure Experiment*

CAUTION

- **Do NOT apply negative (upward) forces and overload the structure (greater than 280 N).**
- **Do not remove any cables and strain gauges.**

4.4.1 Test procedures for Hardware Test

1. Connect the additional member (member 6) to the structure, as shown in Fig. 4b.
2. Repeat step 2 to 3 in the previous hardware test of statically determinate structure. Record the strains and displacements at various load levels in Table 3.

4.4.2 Test procedures for Virtual Experiment

1. Turn on the software in Virtual Experiment Mode.
2. Click and drag a member from the tool box to the structure in the hardware mimic, it will automatically position itself when it is near to the correct place.
3. Repeat step 3 to 5 in the previous statically determinate structure virtual experiment. Record the theoretical responses at various load levels in Table 3.

4.4.3 Questions and Discussions

1. Compare the gradient of the displacement-load graphs in the first experiment and this experiment. Comment on the overall stiffness of the trusses.
2. Compare the forces in the members from the first experiment and this experiment.
3. According to the comparisons presented in 1 to 3, what do you think about the safety and economy of the two different structures?